Clarke®

GAS HEATERS

MODEL NOS: 900DV,1600DV & 2100DV

PART NOS: 6920175, 6920191 & 6920196

USER INSTRUCTIONS

ORIGINAL INSTRUCTIONS

LS0618 - ISS 1

Downloaded from www.Manualslib.com manuals search engine

INTRODUCTION

Thank you for purchasing this CLARKE Gas Powered Heater.

Before attempting to use this product, please read this manual thoroughly and follow the instructions carefully.

GUARANTEE

This product is guaranteed against faulty manufacture for a period of 12 months from the date of purchase. Please keep your receipt which will be required as proof of purchase.

This guarantee is invalid if the product is found to have been abused or tampered with in any way, or not used for the purpose for which it was intended.

Faulty goods should be returned to their place of purchase, no product can be returned to us without prior permission.

This guarantee does not effect your statutory rights.

FUNCTION AND OPERATING PARAMETERS

This is a gas powered heater. It's intended use is for drying and the warming of commercial/industrial buildings where adequate ventilation is provided.

- It must be operated as prescribed in the operating manual.
- Is not intended to be used for domestic use or for the heating of habitable areas.
- Is not intended to be used to reach and maintain a certain level of human thermal comfort within an enclosed space in which the heater is situated.
- Is not intended to be used in enclosed areas with restricted ventilation.
- Is not for use in areas with high levels of fluctuating drafts.
- Is not intended for warming animals or live stock.

Parts & Service: 020 8988 7400 / E-mail: Parts@clarkeinternational.com or Service@clarkeinternational.com

Downloaded from www.Manualslib.com manuals search engine

CARBON MONOXIDE

WARNING: LACK OF AIRFLOW CAN CAUSE CARBON MONOXIDE POISONING.

WARNING: CARBON MONOXIDE POISONING CAN KILL.

WE RECOMMEND THAT YOU USE A CARBON MONOXIDE DETECTOR, AVAILABLE FROM YOUR CLARKE DEALER

WHAT ARE THE SIGNS

The 6 symptoms to look out for:

• Headaches	• Breathlessness
• Dizziness	• Collapse
• Nausea	• Loss of consciousness

The following groups of people are more likely to be effected by Carbon Monoxide.

1. Pregnant women,
2. Persons with a heart or lung condition, anaemia
3. People under the influence of alcohol,
4. Those living/working at high altitude

WHAT TO DO IF YOU SUSPECT CO POISONING

- Get fresh air immediately. Open doors and windows, switch off the heater and leave the area.
- See your doctor immediately or go to hospital - let them know that you suspect CO poisoning. They can do a blood or breath test to check.
- Do not use the heater until it has been serviced.

Parts & Service: 020 8988 7400 / E-mail: Parts@clarkeinternational.com or Service@clarkeinternational.com

Downloaded from www.Manualslib.com manuals search engine

SAFETY INFORMATION

Read, and make sure you fully understand the following precautions and the hazards associated with this type of heater.

- Use only liquid propane gas with this heater.
- Make sure that the Propane gas bottle, gas hose and electric cable, are positioned behind the unit, away from the heat.
- Make sure that the gas hose and regulator connections are gastight and the hose is not kinked.
- Do not use the heater where flammable vapours or if a high dust content is present in the air.
- Only use with the voltage specified and make sure that the heater is properly earthed.
- Use only in well ventilated areas. Provide ventilation of at least 3 square feet of fresh air for every 100,000 BTU/hr of rating.
- Always allow the working clearances around the heater as stated on page 8.
- Keep the heater as far as practical from propane tanks and do not point the heater directly at any propane tank.
- Stand the heater on a stable, level surface whilst hot or operating. If the heater overturns, a fire can occur.
- Keep children and animals away from heater at all times.
- Use heater in accordance with all fire regulations.
- Do not use heater for domestic heating in living or sleeping areas.
- Do not leave a heater plugged in without adult supervision if children or animals are likely to be present.
- Do not move, handle, replenish the gas supply or service the heater when it is hot, operating or plugged in.
- Do not attach the heater to any duct work, or impede air flow into or out of the heater.
- Disconnect the heater from the power supply when not in use.
- Use ONLY the factory pre-set regulator supplied with the heater.
- If the heater works for long periods at maximum capacity, be aware that it is possible for ice to form on the gas cylinder due to excessive evaporation.
- Do not direct hot air towards the gas cylinder in order to de-ice.

Parts & Service: 020 8988 7400 / E-mail: Parts@clarkeinternational.com or Service@clarkeinternational.com

Downloaded from www.Manualslib.com manuals search engine

- Do not use in wet areas, basements or below ground level. Propane gas is heavier than air and will sink to the lowest possible level.
- Make sure that the heater is correctly maintained in accordance with this manual.
- This heater can be used by children aged from 8 years and above and persons with reduced physical, sensory or mental capabilities or lack of experience and knowledge if they have been given supervision or instruction concerning use of the appliance in a safe way and understand the hazards involved.
- Children shall not play with the heater. Cleaning and user maintenance shall not be made by children without supervision.
- If the supply cable is damaged, it must be replaced by a special cable or assembly available from the manufacturer or its service agent.

SAFETY SYMBOLS

The following safety symbols may be found on the product.

	General hazard warning		Danger-Hot Surfaces.
	Always read the manual before use	.	

ENVIRONMENTAL RECYCLING POLICY

Through purchase of this product, the customer is taking on the obligation to deal with the WEEE in accordance with the WEEE regulations in relation to the treatment, recycling & recovery and environmentally sound disposal of the WEEE.

In effect, this means that this product must not be disposed of with general household waste. It must be disposed of according to the laws governing Waste Electrical and Electronic Equipment (WEEE) at a recognised disposal facility.

Parts & Service: 020 8988 7400 / E-mail: Parts@clarkeinternational.com or Service@clarkeinternational.com

Downloaded from www.Manualslib.com manuals search engine

ELECTRICAL CONNECTIONS

⚠	**WARNING: READ THESE ELECTRICAL SAFETY INSTRUCTIONS THOROUGHLY BEFORE CONNECTING THE PRODUCT TO THE MAINS SUPPLY.**

Connect the mains lead to a standard, 230 Volt (50Hz) electrical supply through an approved 13 amp BS 1363 plug or a suitably fused isolator switch.

The heater may also be connected to a 110V supply through a suitably approved plug.

TO CHANGE THE VOLTAGE

1. Remove the two screws shown.
2. Rotate the cover so that the voltage you want is at the top (230V or 110V).
3. Replace the cover and screws.
4. Make sure that the plug is suitable for the voltage selected and replace it if necessary..

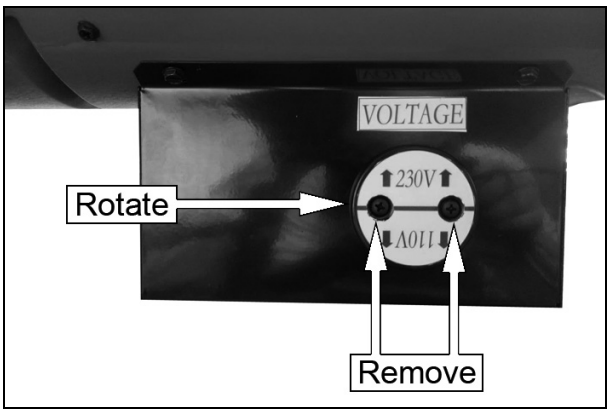

⚠	**WARNING: WARNING! THIS APPLIANCE MUST BE EARTHED** **WARNING: THE WIRES IN THE POWER CABLE OF THIS PRODUCT ARE COLOURED IN ACCORDANCE WITH THE FOLLOWING CODE:** **BLUE = NEUTRAL BROWN = LIVE YELLOW AND GREEN = EARTH**

As the colours of the flexible cable of this appliance may not correspond with the coloured markings identifying terminals in your plug proceed as follows:

- Connect GREEN & YELLOW cord to terminal marked with a letter "E" or Earth symbol ⏚
- Connect BROWN cord to terminal marked with a letter "L"
- Connect BLUE cord to terminal marked with a letter "N"

If this appliance is fitted with a plug which is moulded onto the electric cable (i.e. non-rewirable) please note:

1. The plug must be thrown away if it is cut from the electric cable. There is a danger of electric shock if it is subsequently inserted into a socket outlet.
2. Never use the plug without the fuse cover fitted.
3. Should you wish to replace a detachable fuse carrier, ensure that the correct replacement is used (as indicated by marking or colour code).

Parts & Service: 020 8988 7400 / E-mail: Parts@clarkeinternational.com or Service@clarkeinternational.com

Downloaded from www.Manualslib.com manuals search engine

4. Replacement fuse covers can be obtained from your local dealer or most electrical stockists.
5. The fuse in the plug must be replaced with one of the same rating (13 amps) and this replacement must be ASTA approved to BS1362.

We strongly recommend that this machine is connected to the mains supply through a Residual Current Device (RCD).

If in doubt, consult a qualified electrician. Do not attempt any electrical repairs yourself

UNPACKING

When unpacking, examine the heater for possible shipping damage. Should any damage be apparent, please notify your Clarke dealer immediately.

Your heater is fully assembled,only the electrical and gas supplies need connecting. Retain any plastic cover caps (attached to the inlet connector and hose/regulator assembly) for future storage.

PROPANE GAS SUPPLY

These heaters are designed for use with PROPANE GAS ONLY. Gas cylinders are not supplied, but are readily available from builders merchants or gas suppliers etc.

This range of portable, direct fired gas heaters are designed to BS 4096 for industrial applications to give safe, efficient and reliable operation.

As with all mechanical equipment, optimum performance will only be achieved if the correct operation and servicing procedures are followed.

WARNING: PROPANE GAS CYLINDERS MUST BE USED AND STORED IN ACCORDANCE WITH THE HIGHLY FLAMMABLE LIQUIDS AND LIQUEFIED PETROLEUM GASES REGULATIONS 1972

Downloaded from www.Manualslib.com manuals search engine

GAS CONNECTION

Connect the free end of the gas hose to the gas inlet connection on the heater and tighten to ensure there are no gas leaks. Before attaching the regulator to the gas cylinder, ensure the mating parts are free from grease and dirt and are undamaged.

Fit the regulator to the cylinder, tightening the thread as tight as possible with a propane spanner, noting that the threads are LEFT HANDED. To check for leaks, use soapy water or liquid soap applied to each of the connections. Any bubbles formed indicate a leak. Correct all leaks immediately.

Fig 1

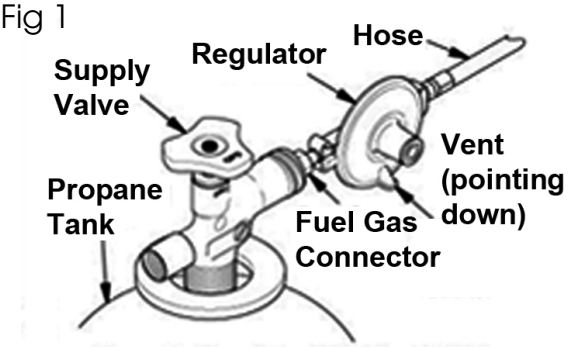

Regulator with vent pointing down

IMPORTANT: The gas hose and cylinder must ALWAYS be located well behind the heater.

In order to reduce the risk of icing up when operating at long periods at maximum capacity, you should use a larger capacity gas bottle, or two/ three bottles in parallel, as shown in Fig 2.

- The 'Tee' piece and 'pigtails' are readily available from your builders merchants or gas supplier.

Fig 2

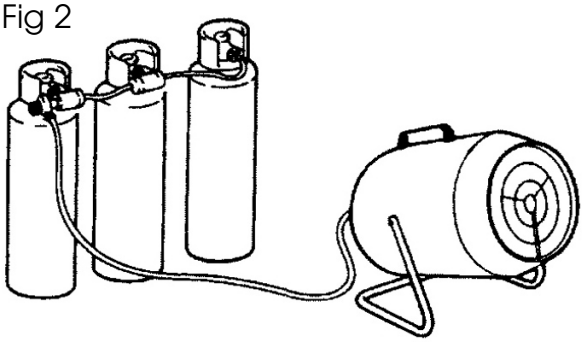

CHANGING GAS BOTTLES

1. Turn off the heater and disconnect from the electrical supply.
2. Close the gas valve on the bottle and unscrew the regulator, (left hand thread).
3. Ensure the replacement bottle screw threads and gas orifice is perfectly clean before screwing in the regulator valve tightly.
4. Check to ensure there are no leaks using soapy water and when satisfied, plug in to the electrical supply and restart the heater.

Parts & Service: 020 8988 7400 / E-mail: Parts@clarkeinternational.com or Service@clarkeinternational.com

Downloaded from www.Manualslib.com manuals search engine

OPERATING SPACE AND AIR SUPPLY

MINIMUM FRESH AIR OPENING REQUIREMENTS

As a general rule of thumb, an opening of $1in^2$ per 1000 Btu/hr is a minimum requirement.

These heaters are specified as requiring a minimum ventilation of 3 sq/ft per 100,000BTU/hr.

OPERATING SPACE

Do not obstruct the air intake to the heater and allow the following clearances from combustible surfaces.

Outlet: 8 feet (2.4 m)

Sides: 2 feet (0.6 m)

Top: 6 feet (1.8 m)

Rear: 2 feet (0.6 m)

Keep the heater as far as practical from propane tanks and never point the heater directly at any propane tank.

Parts & Service: 020 8988 7400 / E-mail: Parts@clarkeinternational.com or Service@clarkeinternational.com

Downloaded from www.Manualslib.com manuals search engine

PRINCIPLE OF OPERATION

Understanding the basic operation of the heater will reinforce the need to maintain the unit in top condition at all times, whilst always observing the safety precautions.

The heater comprises four basic systems:

1. The gas system.
2. The air system.
3. The ignition system.
4. The safety control system.

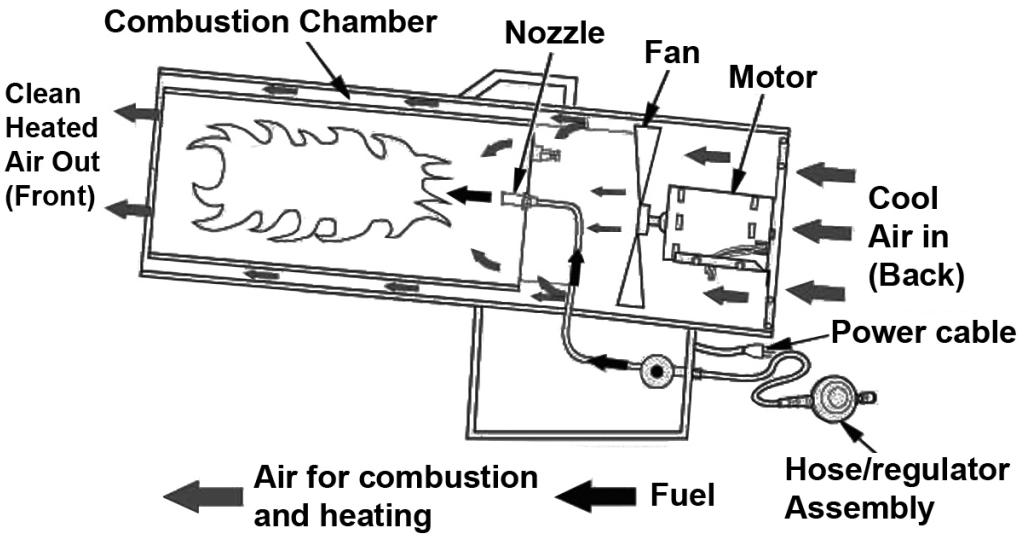

Cross-Section Operational View

AIR SYSTEM

An axial fan, which is energised when switching on, provides the air flow through the combustion chamber to provide a stream of hot air from the heater.

GAS SYSTEM

The gas supply to the machine is by means of a high pressure hose, connected to an LPG (Liquid Propane Gas) cylinder, via a pressure regulator.

When the mains supply is switched on, the Safety Shut-off valve allows the gas to flow to the Flame Failure Valve, and when the Failure Valve Override Knob is depressed, gas flows to the burner head.

Parts & Service: 020 8988 7400 / E-mail: Parts@clarkeinternational.com or Service@clarkeinternational.com

Downloaded from www.Manualslib.com manuals search engine

IGNITION SYSTEM

Ignition is automatic with this heater as soon as the gas valve button is depressed, with a continuous spark from the spark plug igniting the gas. As the thermocouple heats up, a low voltage is fed to the Flame Failure Valve, causing the valve to open, so that after a few seconds, the Gas ValveButton may be released and the flame is established.

SAFETY CONTROL SYSTEM

Should the flame extinguish for any reason, the thermocouple will quickly cool, causing the Flame Failure Valve to close, shutting off the gas supply.

Similarly, should there be a power failure, causing the fan motor to stop, the Safety Shut-Off Valve will shut off the gas supply.

Additionally, the machine is equipped with thermal overload protection, which will intervene should the unit overheat, shutting off the electrical supply.

STARTING PROCEDURE

WARNING: BEFORE STARTING THE HEATER, YOU MUST ENSURE THAT THE MINIMUM VENTILATION REQUIREMENTS ARE OBSERVED TO AVOID THE RISK OF CARBON MONOXIDE POISONING.

1. Ensure there is sufficient gas and that it is correctly connected.
2. Open the supply valve on the gas cylinder, and fully open the regulator valve adjacent to the gas inlet pipe.
3. Plug the heater in to a suitable power supply.
4. Set the flame intensity control valve (B), to a low setting,
5. Set the fan switch (A) to the ON (I) position. Confirm the fan operates.

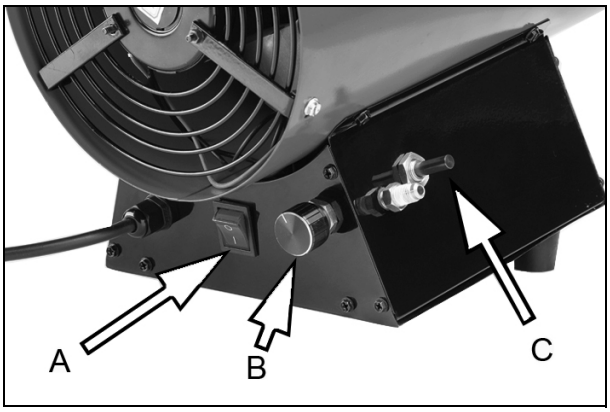

6. Hold in the gas valve button (C), until the thermocouple is energised and the heater ignites.
7. If the heater fails to ignite, there may be air in the hose so keep the gas valve open and wait for about 15 seconds. Wait 30 seconds for unburned fuel to exit the heater. Repeat the step above.

Parts & Service: 020 8988 7400 / E-mail: Parts@clarkeinternational.com or Service@clarkeinternational.com

Downloaded from www.Manualslib.com manuals search engine

8. When the burner remains lit, set the heater at the required level by turning the flame intensity control valve counter-clockwise. If the burner goes out, turn off the gas. Turn the gas valve fully clockwise to its lowest position. Check the fuel supply. If adequate fuel is available, re-start the heater from step 1.

Should the flame extinguish when the ignition button is released, wait for 1 minute, before repeating the operation.

- Turning the flame intensity control valve anti-clockwise will increase the gas supply and therefore the output, clockwise to decrease.

If ignition is difficult or irregular, ensure the fan is operating and that the air inlet and outlet are completely clear. Also ensure that the electrode gap is correct, and that the electrode is clean (see Maintenance)

Should the thermal overload protection feature operate and the spark plug is seen to be operating, shut off the gas supply and allow the unit to cool for at least 10 minutes with the fan running, before attempting to relight the burner.

Should the flame safety valve operate, the heater may be restarted once the cause of the problem has been found and rectified.

SHUT-DOWN PROCEDURE

1. Turn off the gas at the propane cylinder valve(s).
2. Let the heater run while any gas left in the supply hoses is burnt off.
3. Allow the fan to run for 2 - 3 minutes with the burner off, in order to allow the casing to cool down and the fan to disperse any residual gas.
4. Switch off the fan and unplug from the electrical supply.
5. Disconnect the gas supply.

Downloaded from www.Manualslib.com manuals search engine

STORAGE

CAUTION: DISCONNECT THE HEATER FROM THE PROPANE SUPPLY CYLINDER(S)

1. Store the propane gas cylinders in a safe manner outdoors and keep them below 100 ^{O}F (37 ^{O}C).
2. Place protective bags over fittings & connectors and store in a clean, dry place.
3. Fit the plastic cover caps which were removed when unpacking, over the connections they covered when received.
4. When removing from storage, always check inside of heater for debris/ foreign objects before returning to use. Do not store the hose/regulator inside the combustion chamber.

MAINTENANCE

WARNING: BEFORE CARRYING OUT ANY ADJUSTMENT OR MAINTENANCE, ENSURE THE HEATER IS SWITCHED OFF, DISCONNECTED FROM THE MAINS AND GAS SUPPLY, AND HAS BEEN GIVEN ADEQUATE TIME TO COOL DOWN.

It is essential that the heater is correctly maintained and kept in top condition at all times.

All models are similar, in that access to the control components is gained by removing the access panel under the base of the heater which is secured by screws around the edge.

MONTHLY (WHEN IN CONSTANT USE)

Check the spark plug for cleanliness and correct operation. Have the gap re-set to no more than 5mm by your Clarke service engineer.

Check the condition of the gas hose. If there are any signs of deterioration, it should be renewed using only a Clarke original spare part.

Ensure that all connections are clean and secure.

When necessary, clean the fan and the inside of the heater thoroughly.

The use of parts other than genuine Clarke replacement parts may result in safety hazards or decreased performance, and will invalidate your warranty.

Downloaded from www.Manualslib.com manuals search engine

TROUBLESHOOTING

PROBLEM	CAUSE	REMEDY
Motor does not start.	No power.	Check power supply, power cable and fuse, and replace if necessary.
	Faulty motor/capacitor. Fan blades bent.	Check & replace if necessary.
	Lock out of appliance due to overheating. Thermal cut-out in operation.	Identify cause of over-heating. Wait for 5 mins and restart. If condition persists, contact your Clarke dealer for advice.
Spark plug does not spark.	Gap incorrect, faulty connection	Clean and reset gap if necessary or replace.
Heater will not ignite	Connection/installation incorrect.	Check that installation instructions are followed.
	No spark at spark plug due to loose HT lead or PCB fault.	Check spark plug wire. Tighten or re-attach if loose. If condition persists, contact your Clarke dealer for advice.
Heater stops during operation.	Excessive or insufficient gas supply.	Check pressure regulator & replace if necessary.
		Check that fan motor works properly.
		Check, and use a larger cylinder, or two or more in parallel.
		Check there are no obstructions to air flow. Check ventilation is adequate. See also `Motor does not Start'.
No gas flow to the burner.	Cylinder gas tap closed.	Open the gas tap.
	Cylinder is empty.	Replace cylinder.
	Nozzle is obstructed.	Remove nozzle & clean.
	Gas leaks from supply hose or from tap.	Use soapy water to find the leak and repair.

Parts & Service: 020 8988 7400 / E-mail: Parts@clarkeinternational.com or Service@clarkeinternational.com

Downloaded from www.Manualslib.com manuals search engine

PROBLEM	CAUSE	REMEDY
Burner starts but stops as the gas valve button is released.	Thermocouple is not warm enough or is faulty.	Repeat the starting operation, keeping the gas valve button depressed for longer.
	Weak gas supply.	Increase flame intensity control valve setting.

SPECIFICATIONS

Model Number	900DV	1600DV	2100DV
Dimensions (L x W x H) mm	500x215x370	500x215x370	640x235x385
Weight	6.65 kg	6.7 kg	8.6 kg
Fuse Rating (230V only)	13A	13A	13A
Operating Voltage	230V 50Hz 1ph / 110V 50Hz	230V 50Hz 1ph / 110V 50Hz	230V 50Hz 1ph / 110V 50Hz
Rated Input Power	100W	110W	130 W
Rated Input	110V - 1.5A 220V - 0.75A;	110V - 1.5A 220V - 0.75A;	110V - 1.5A 220V - 0.75A;
Gas Consumption (kg/hr)	1.16-1.79	1.59-2.63	3.0-3.86
Air Flow (m3/hr)	535	580	690
Gas Pressure (max)	300mBar	300mBar	300mBar
Min Heat Output (kW/btu)	16.1/55,000	22/75,000	35/120,000
Max Heat Output (kW/btu	24.9/85000	36.6/125,000	50/170,000

Please note that the details and specifications contained herein are correct at the time of going to print. However CLARKE International reserve the right to change specifications at any time without prior notice. Always consult the heater's data plate.

Parts & Service: 020 8988 7400 / E-mail: Parts@clarkeinternational.com or Service@clarkeinternational.com

Downloaded from www.Manualslib.com manuals search engine

PARTS DIAGRAM - DEVIL 900DV / 1600DV

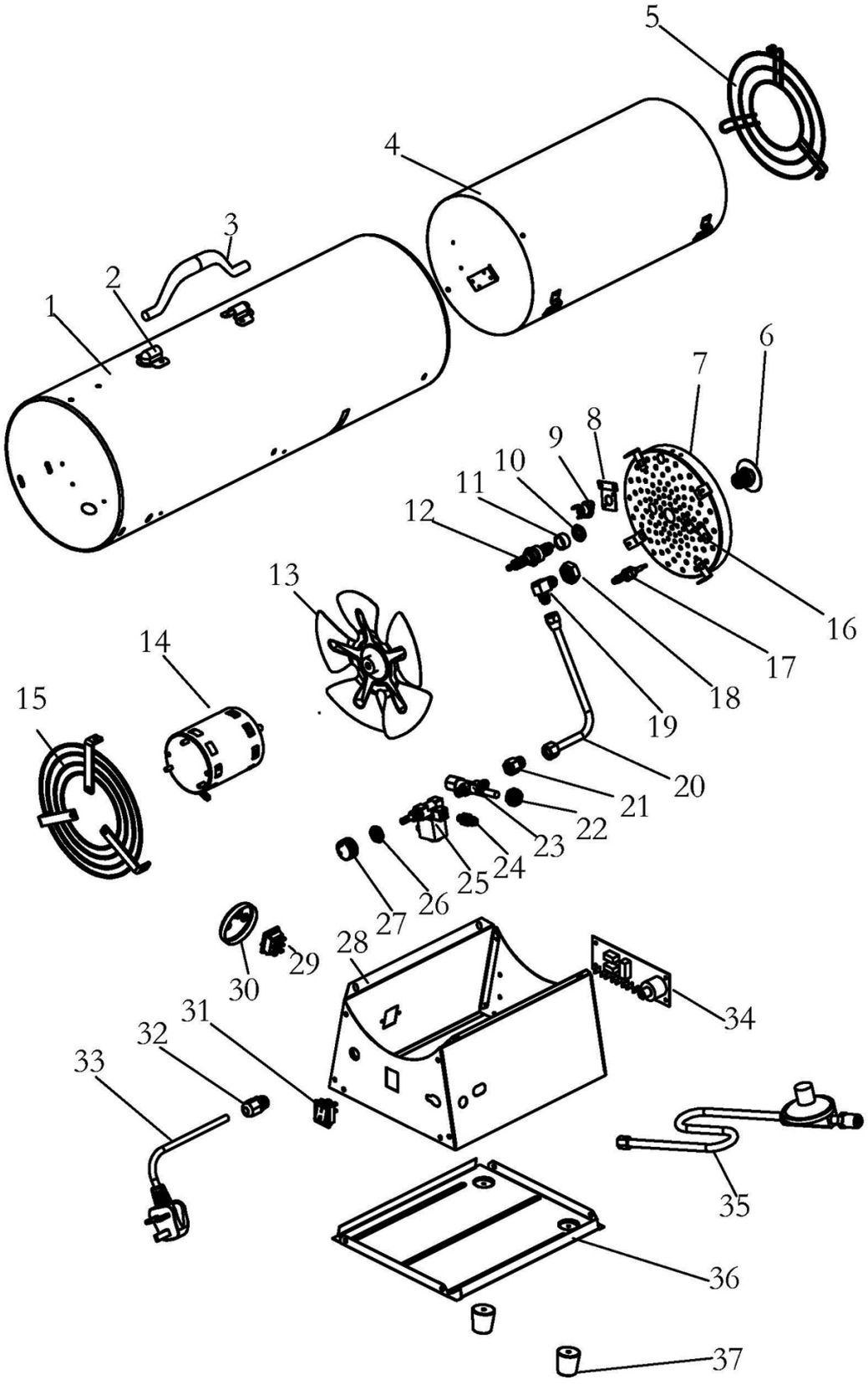

Parts & Service: 020 8988 7400 / E-mail: Parts@clarkeinternational.com or Service@clarkeinternational.com

Downloaded from www.Manualslib.com manuals search engine

PARTS LIST - DEVIL 900DV / 1600DV

No	Description
1	Outer Shell
2	Handle Mounting clips
3	Handle
4	Middle Cylinder
5	Front Guard
6	Orifice Assembly
7	Flame Holder Assembly
8	High Limit Switch Bracket
9	High Limit Switch
10	Spark Plug Nut
11	Spark Plug Washer
12	Spark Plug
13	Fan
14	Motor Assembly
15	Inlet Grille
16	Thermocouple Bracket
17	Thermocouple
18	Orifice Nut
19	Elbow Fitting

No	Description
20	Fuel Tube Assembly
21	Extension Fitting
22	Control Valve Assembly Nut
23	Control Valve Assembly
24	Male Fitting Connector
25	Solenoid Valve Assembly
26	Solenoid Valve Assembly Nut
27	Flame Intensity Control Knob
28	Control Box
29	Dual Voltage Switch
30	Dual Voltage Switch Cover
31	Power Switch
32	Bushing Strain Relief
33	Power Cord Assembly
34	Ignition Circuit Board
35	Hose/Regulator Assembly
36	Access Panel
37	Rubber Foot

Parts & Service: 020 8988 7400 / E-mail: Parts@clarkeinternational.com or Service@clarkeinternational.com

Downloaded from www.Manualslib.com manuals search engine

PARTS DIAGRAM - DEVIL 2100DV

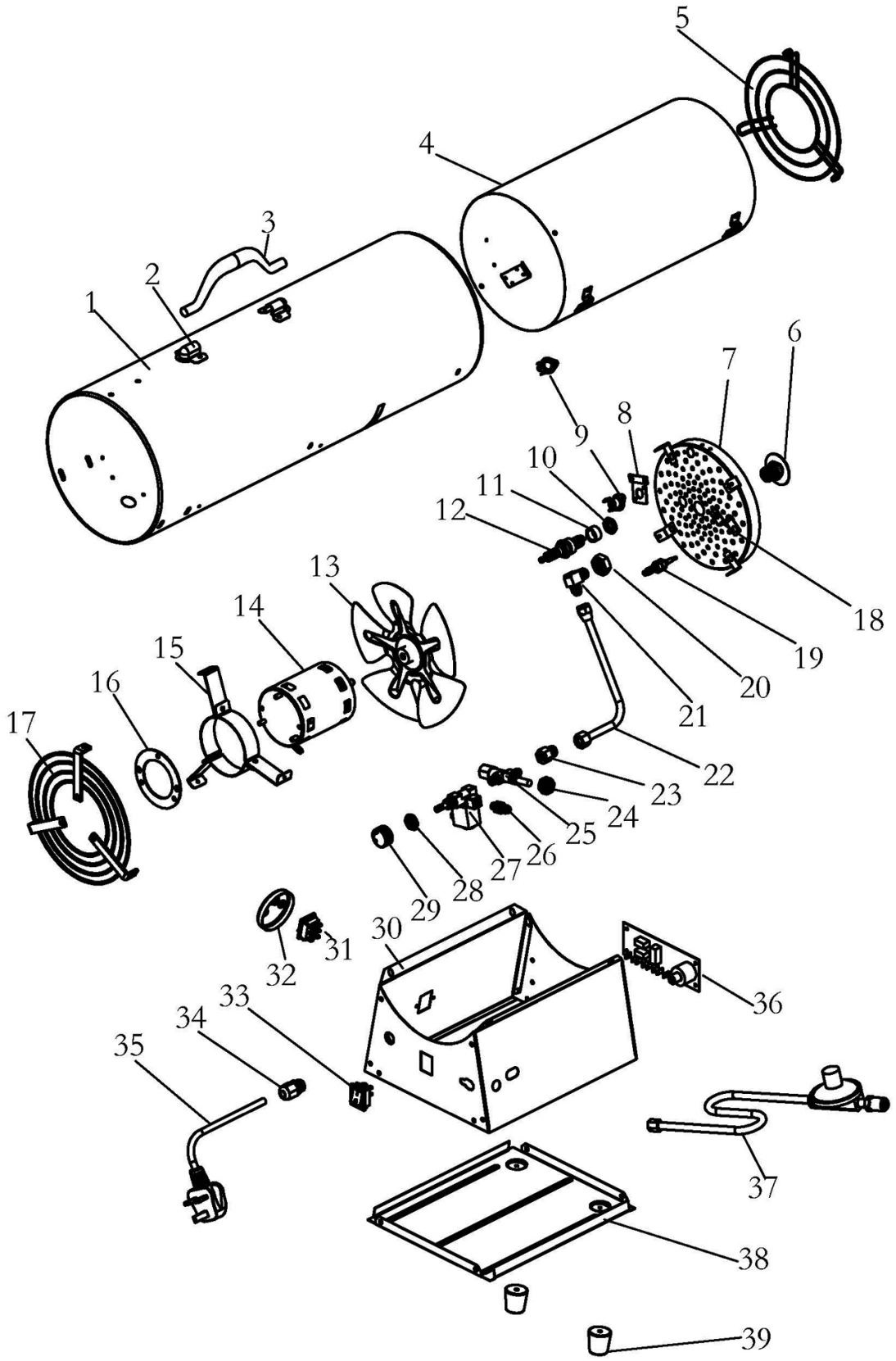

Parts & Service: 020 8988 7400 / E-mail: Parts@clarkeinternational.com or Service@clarkeinternational.com

Downloaded from www.Manualslib.com manuals search engine

PARTS LIST - DEVIL 2100DV

No	Description
1	Outer Shell
2	Handle Mounting clips
3	Handle
4	Middle Cylinder
5	Front Guard
6	Orifice Assembly
7	Flame Holder Assembly
8	High Limit Switch Bracket
9	High Limit Switch
10	Spark Plug Nut
11	Spark Plug Washer
12	Spark Plug
13	Fan
14	Motor Assembly
15	Motor Mounting Bracket
16	Bracket
17	Inlet Grille
18	Thermocouple Bracket
19	Thermocouple
20	Orifice Nut

No	Description
21	Elbow Fitting
22	Fuel Tube Assembly
23	Extension Fitting
24	Control Valve Assembly Nut
25	Control Valve Assembly
26	Male Fitting Connector
27	Solenoid Valve Assembly
28	Solenoid Valve Assembly Nut
29	Flame Intensity Control Knob
30	Control Box
31	Dual Voltage Switch
32	Dual Voltage Switch Cover
33	Power Switch
34	Bushing Strain Relief
35	Power Cord Assembly
36	Ignition Circuit Board
37	Hose/Regulator Assembly
38	Access Panel
39	Rubber Foot

Parts & Service: 020 8988 7400 / E-mail: Parts@clarkeinternational.com or Service@clarkeinternational.com

Downloaded from www.Manualslib.com manuals search engine

WIRING DIAGRAMS

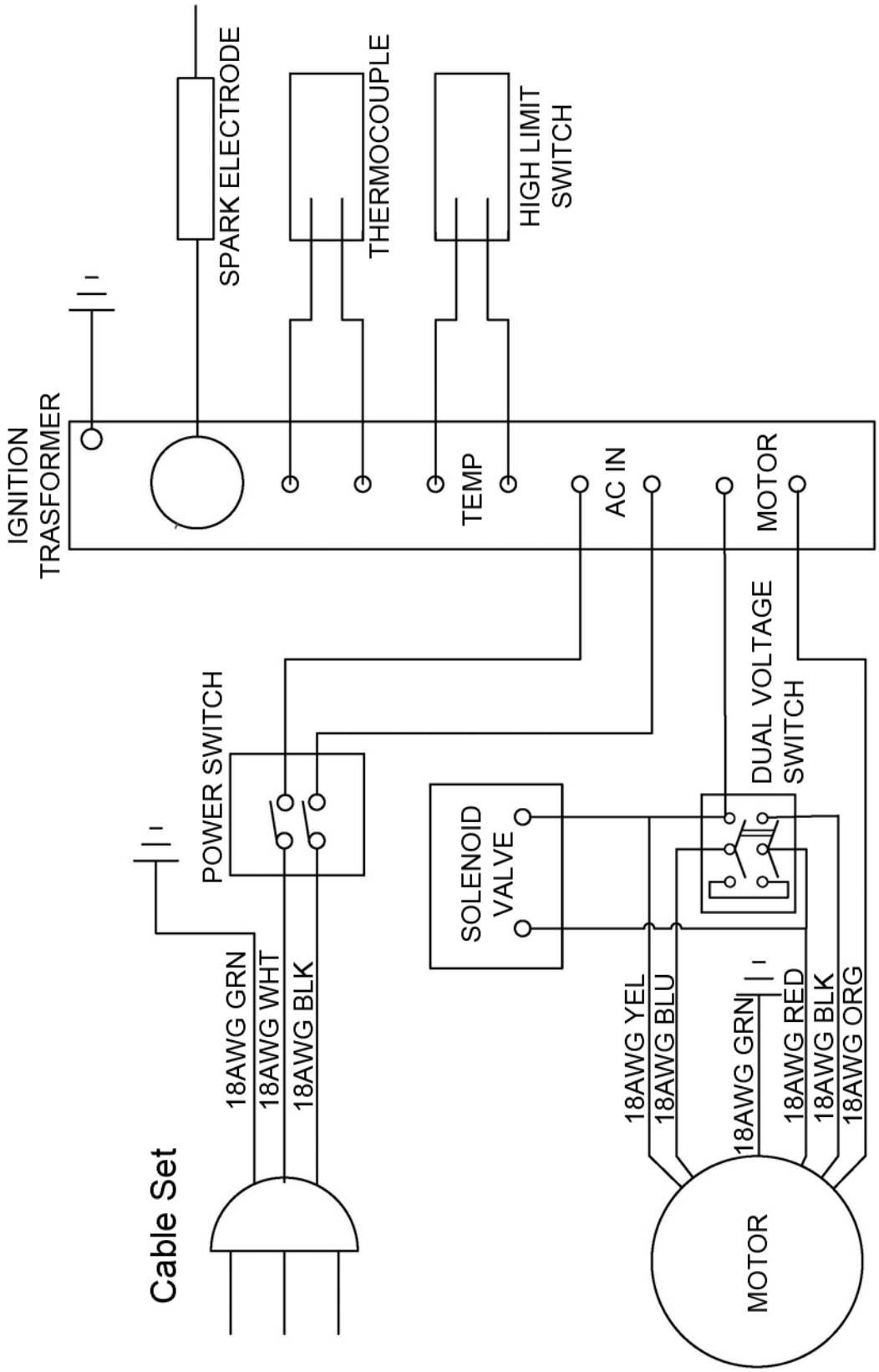

Downloaded from www.Manualslib.com manuals search engine

DECLARATION OF CONFORMITY

CE

Clarke® INTERNATIONAL

Hemnall Street, Epping, Essex CM16 4LG

DECLARATION OF CONFORMITY

This is an important document and should be retained.

We hereby declare that this product(s) complies with the following directive(s):

2014/35/EU	*Low Voltage Equipment Directive.*
2014/30/EU	*Electromagnetic Compatibility Directive.*
2016/426	*Appliances Burning Gaseous Fuels.*
2011/65/EU	*Restriction of Hazardous substances.*

The following standards have been applied to the product(s):

EN 1596:1998/A1:2004, EN 60335-1:2012/A11: 2014, EN 60335-2-102:2006/A1:2010, EN 55014-1:2006/A2:2011, EN 55014-2:1997/A2:2008, EN 61000-3-2:2014, EN 61000-3-3:2013.

The technical documentation required to demonstrate that the product(s) meet(s) the requirement(s) of the aforementioned directive(s) has been compiled and is available for inspection by the relevant enforcement authorities.

The CE mark was first applied in: 2018

Product Description:	Gas Heaters
Model number(s):	Devil 900DV, 1600DV, 2100DV.
Serial / batch Number:	N/A
Date of Issue:	19/06/2018

Signed:

J.A. Clarke

Director

19-06-2018 Devil Heaters DOC (rv0) FINAL

Page 1 of 1

Downloaded from www.Manualslib.com manuals search engine

Downloaded from www.Manualslib.com manuals search engine

Downloaded from www.Manualslib.com manuals search engine

A SELECTION FROM THE VAST RANGE OF

Clarke®

QUALITY PRODUCTS

AIR COMPRESSORS
From DIY to industrial, Plus air tools, spray guns and accesories.

GENERATORS
Prime duty or emergency standby for business, home and leisure.

POWER WASHERS
Hot and cold, electric and engine driven - we have what you need

WELDERS
Mig, Arc, Tig and Spot. From DIY to auto/industrial.

METALWORKING
Drills, grinders and saws for DIY and professional use.

WOODWORKING
Saws, sanders, lathes, mortisers and dust extraction.

HYDRAULICS
Cranes, body repair kits, transmission jacks for all types of workshop use.

WATER PUMPS
Submersible, electric and engine driven for DIY, agriculture and industry.

POWERTOOLS
Angle grinders, cordless drill sets, saws and sanders.

STARTERS/CHARGERS
All sizes for car and commercial use.

PARTS & SERVICE: 0208 988 7400
E-mail: Parts@clarkeinternational.com or Service@clarkeinternational.com

SALES: UK 01992 565333 or Export 00 44 (0)1992 565335

Clarke® INTERNATIONAL Hemnall Street, Epping, Essex CM16 4LG
www.clarkeinternational.com

Downloaded from www.Manualslib.com manuals search engine